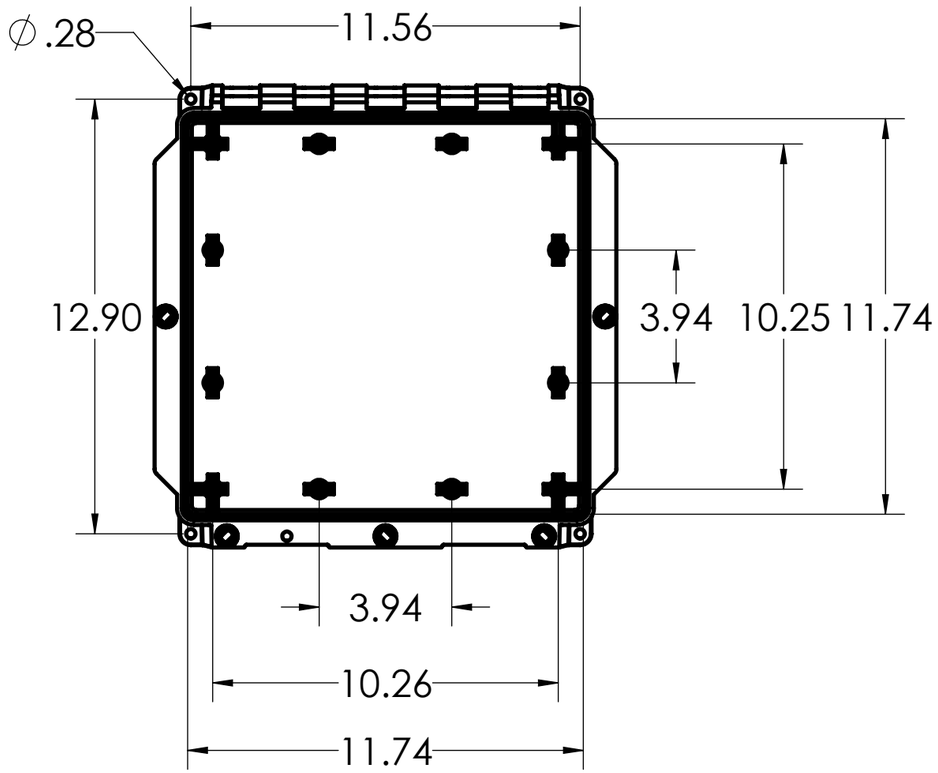

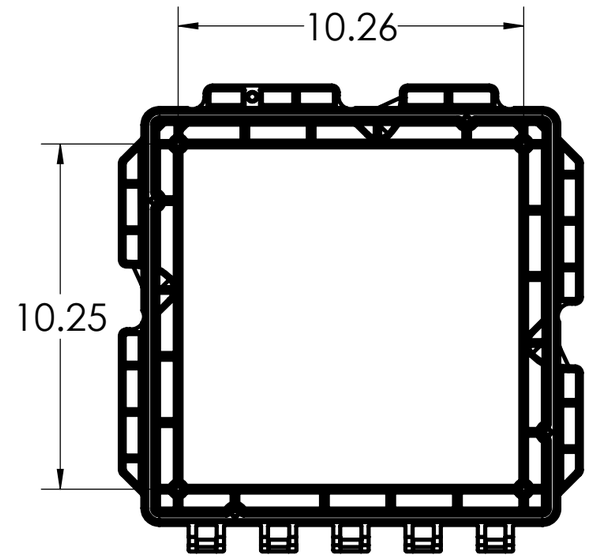

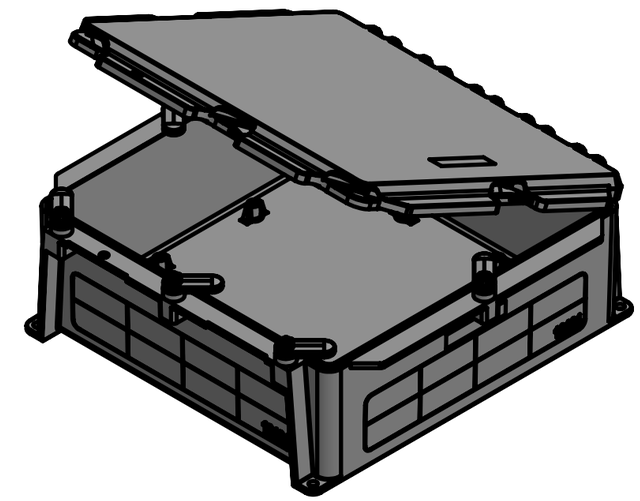

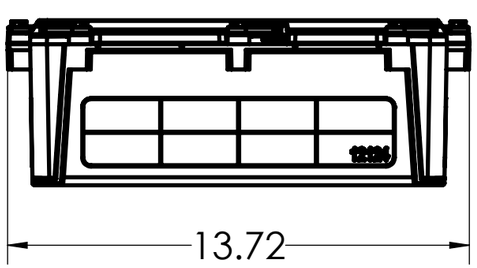

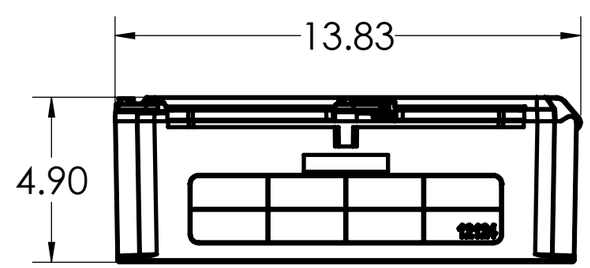

DIMENSIONS SHOWN ARE FOR REFERENCE AND ARE SUBJECT TO CHANGE WITHOUT NOTICE

IPEX Technologies Inc.

PART DESCRIPTION

JBXH12124 12"x12"x4" PVC JUNCTION BOX HINGED SCEPTER JBOX

PRODUCT CODE:	*UNIT: INCHES UNLESS DUAL DIMENSION: INCH [METRIC]*	*SCALE:*
277103		NTS
DRAWN: T.Q.		